PETROCIL	SPETCO	PROJECT TITLE: **DEPLETION COMPRESSION SYSTEM & SRU AT EPF-50 AND JPF-3, NORTH KUWAIT**	Kuwait Oil Company
KOC CONTRACT NO: 25063040		DOCUMENT TITLE: **TECHNICAL SPECIFICATION FOR PIPING INSULATION PART- I & PART- II**	DOC NO. 63040-00000-02-03-TSC-0101 / REV 0
PEC JOB NO: 45001			SHEET 1 of 34
			KOC DOC NO.

TECHNICAL SPECIFICATION FOR PIPING INSULATION PART- I & PART- II

REV.	DATE	DESCRIPTION	PRPD.	CHKD.	APPD.
0	07-10-2025	ISSUED FOR DESIGN	ARK	UKS	GK
A	18-09-2025	ISSUED FOR REVIEW / APPROVAL	ARK	UKS	GK

TABLE OF CONTENTS

1 INTRODUCTION 4
PART 1 4
PART 2 4
2 SCOPE 5
3 REFERENCES 5
3.1 PRIMARY CODE 5
3.2 INTERNATIONAL STANDARDS 5
3.3 KOC STANDARDS 7
3.4 PROJECT SPECIFICATIONS 8
4 ABBRIVATIONS 8
5 DEFINITION 8
6 RESPONSIBILITY 9
7 INSULATION TYPES AND APPLICATIONS 9
8 EXTNT OF INSULATION FOR PIPING AND EQUIPMENT 10
9 GENERAL REQUIREMENT 11
10 MATERIAL REQUIREMENT 11
10.1 MINERAL ROCK WOOL 11
10.2 PERFORMED POLYURETHANE FOAM FOR COLD INSULATION 12
10.3 ALUMINIUM PROTECTIVE COVERING 12
10.4 FASTENERS AND MISCELLANEOUS INSULATION ACCESSORIES 12
10.5 FABRICATION ADHESIVES, MASTICS AND METAL SELANTS 12
10.6 REMOVABLE INSULATION COVERS 13
11 INSTALLATION, HOT INSULATION (HC, PP, ET) 13
11.1 PIPING INSULATION 13
11.2 EQUIPMENT INSULATION 13
11.3 MACHINERY INSULATION 14
11.4 INSTRUMENT INSULATION 14
11.5 INSULATION FINISH 14
11.6 REQUIREMENT FOR INSULATION TYPE PP 14
11.7 ADDITIONAL REQUIREMENTS FOR INSULATION TYPE ET 15
12 INSULATION, COLD INSULATION (C, COLD SERVICE AND FREEZE PROTECTION) 15
12.1 PIPING INSULATION 15
12.2 EQUIPMENT INSULATION 15

13 INSULATION ATTACHMENT METHODS, INSULATION FINISH REQUIREMENT AND INSULATION THICKNESS TABLE 16

13.1 INSULATION ATTACHMENT METHODS AND MATERIALS (ROCK WOOL) 16

13.2 INSULATION FINISH REQUIREMENT 17

13.3 INSULATION FINISH REQUIREMENT 18

13.4 INSULATION THICKNESSES (MM) FOR PIPING AND EQUIPMENT 20

13.5 INSULATION THICKNESSES (MM) FOR PIPING AND EQUIPMENT 21

13.6 INSULATION THICKNESSES (MM) ELECTRICAL HEAT TRACING (ET)-MINERAL WOOL 22

13.7 INSULATION THICKNESSES (MM) FOR PIPING AND EQUIPMENT COLD INSULATION- TYPE C (POLY URETHANE FOAM) 23

14 FIGURES 24

1 INTRODUCTION

EPF-50 and JPF-3 are sour hydrocarbon processing facilities located in North Kuwait, designed to handle HP sour Hydrocarbons from Jurassic wells in North Kuwait fields. In order to sustain production from the facilities in the projected reservoir depletion from High Pressure (HP) to Medium Pressure (MP) and Low pressure (LP) mode by year 2024, the KOC intends to install MP Compression System and Sulphur Recovery Unit (SRU) in EPF-50 and JPF-3 facilities.

PART 1

EPF-50 facilities receive sour wet hydrocarbon reservoir fluids through flow line gathering networks and trunk lines. Crude, Gas and Water phases are separated in separation section currently receiving well fluid at 1100 psig, and the crude is stabilized to export after desalting. Separator section consists of HP, MP and LP separators in series, and MP and LP gases are compressed to HP and combined with gas from HP Separators. Further, gas is treated via gas sweetening and dehydration units before exporting to pipeline.

As the well fluid pressure depletes to MP, combined feed from the inlet production headers and test header is routed through Crude Pre-heater to the new MP separator which operate at 425 psig and new compressors, which are installed under this project to compress the gas from MP to HP.

After implementation of this project Gas processing capacity will be 200 MMSCFD with 50 MBOPD Oil production and 310 TPD of Molten Sulphur at EPF-50.

Upgradation shall include the following

Section A - Depletion Compression System and Auxiliaries at EPF-50
Section B - Sulphur Recovery Unit (SRU) and Auxiliaries at EPF-50

PART 2

JPF-3 facilities receive sour wet hydrocarbon reservoir fluids through flow line gathering networks and trunk lines. Crude, Gas and Water phases are separated in separation section currently receiving well fluid at 1100 psig, and the crude is stabilized to export after desalting. Separator section consists of HP, MP and LP separators in series, and MP and LP gases are compressed to HP and combined with gas from HP Separators. Further, gas is treated via gas sweetening and dehydration units before exporting to pipeline.

As the well fluid pressure depletes to MP/LP, combined feed from the inlet production headers and test header is routed through Crude Pre-heater to the new MP-LP separator which operate at 425 psig (MP scenario) and 145-150 psig (LP scenario) and then to new MP compressors and LP compressors, which are installed under this project to compress the gas from LP to MP to HP.

Upgradation at JPF-3 facilities intends to increase the Sour gas Compressing capacity to 240 MMSCFD with 50 MBOPD Oil production and 240 TPD of Molten sulphur additional to the existing 200 TPD molten sulphur

Upgradation shall include the following:

Section A - Depletion Compression System and Auxiliaries at JPF-3
Section B - Sulphur Recovery Unit (SRU) and Auxiliaries at JPF-3

Installation of Depletion compression system & SRU at EPF-50 & JPF-3 shall be implemented on Build-Own-Operate basis by Contractor with an option to buy back by Company. The Contract period is divided into “Execution Stage” and “Operation & Maintenance (O&M) Stage”.

Kuwait Oil Company (KOC) has awarded the contract to SPETCO International Petroleum Company W.L.L. (SPETCO) on Build Own Operate (BOO) basis. Petrocil Engineers & Consultants (PETROCIL) is appointed as, Engineering Consultant by SPETCO for the project.

2 SCOPE

This specification defines thermal insulation the requirements for hot/cold surface insulation and personnel protection (operating temperature above 70° c) for equipment and piping in the Gas Treatment System of Depletion Compression System & SRU at EPF-50 & JPF-3, North Kuwait.

This specification includes the different types of insulation, materials and thickness to be applied, the extent of the insulation, attachments, insulation jacketing and the technical application methods to be carried out. Fire proofing is not addressed within this specification.

This specification shall referred in conjunction with KOC specification no. KOC - G - 006 (Rev 0). Thermal and Acoustic Insulation. In case of any conflict between KOC specification and this specification, stringent shall be followed. The insulation shall be as shown on the flow sheets, equipment specifications and drawings and piping. Fire proofing is not addressed within this specification.

3 REFERENCES

The latest editions and revisions of the following codes, standards, documents, specifications, drawings and statutory local laws and regulations available at the time of award of contract shall be applicable. In the event of conflicts between this specification and the latest edition of standards / codes referred herein, the most stringent requirement shall apply.

3.1 PRIMARY CODE

The primary Code for requirements of materials and components, design, fabrication, assembly, erection, examination, inspection and testing of piping systems and associated works shall be ASME B 31.3 latest edition as per the jurisdiction outlined below.

The piping system within fenced areas shall be designed as per ASME B31.3 (Latest edition) with the exception of portion covered under Pipeline, where respective pipeline codes shall apply. Steam distribution system shall follow ASME B31.3 (Latest edition), however piping system within boiler package shall follow the applicable ASME code approved by Company

All process and utility piping systems within the battery limits including piping within the equipment skid limit shall be designed in accordance with the requirements of ASME B31.3 and the Project Piping Specifications. All the plant piping shall be designed for service life of 20 years.

3.2 INTERNATIONAL STANDARDS

STANDARD	DESCRIPTION
American Society of Mechanical Engineers (ASME)	
ASME B 31.3	Process Piping
ASME B 36.10	Welded and Seamless Wrought Steel Pipe

ASME B 36.19	Welded and Seamless Stainless-steel Pipes
ASME B 16.5	Pipe Flanges and Flanged Fittings
ASME B 16.9	Factory - Made Wrought Steel Butt Welding Fittings
ASME B 16.10	Face-to-Face and End-to-End dimensions of Ferrous Valves.
ASME B16.11	Forged Fittings, Socket-Welding and Threaded
ASME B16.20	Metallic Gaskets for Pipe Flanges - Ring-Joint, Spiral-Wound, and Jacketed
ASME B16.21	Non-Metallic Gaskets for Pipe Flanges
ASME B16.25	Butt welding Ends
ASME B 16.34	Valves Flanged, Threaded and Welding Ends.
ASME B 16.36	Orifice Flanges
ASME B 16.48	Steel Line Blanks
ASME B 16.47	Large Diameter Flanges NPS-26 through 60
MSS SP-97	Integrally Reinforced Forged Branch Outlet Fittings etc.
ASTM 795	Thermal Insulation for Use on Contact Austenitic Stainless Steel
ASTM 871	Chemical Analysis of Thermal Insulation Materials for Leachable Chloride, Fluoride, Silicate, and Sodium Ion
ASTM 335	Measuring Non-Fibrous Content of Man-Made Rock and Slag Mineral Fiber Insulation
ASTM 692	Standard Test Method for Evaluating the Influence of Thermal Insulations on External Stress Corrosion Cracking Tendency of Austenitic Stainless
ASTM B209/B209M	Standard Specification for Aluminum and Aluminum-Alloy Sheet and Plate
ASTM C592	Standard Specification for Mineral Fiber Blanket Insulation and Blanket-Type Pipe Insulation (Metal-Mesh Covered) (Industrial Type)
ASTM C612	Standard Specification for Mineral Fiber Block and Board Thermal Insulation
ASTM E84	Test Method for Surface Burning Characteristics of Building Materials
ASTM 547	Standard Specification for Mineral Fiber Pipe Insulation
BS -9585	Thermal insulating materials specification for bonded man-made mineral fiber slabs

3.3 KOC STANDARDS

STANDARDS	VERSION	DESCRIPTION
KOC-G-004	Rev 1	KOC Standard for Packing, Marking and Documentation
KOC-G-006	Rev 0	KOC Standard for Thermal And Acoustic Insulation
KOC-G-007	Rev 7	KOC Standard for Basic Design Data
KOC-L-010	Rev 2	KOC Standard for Personal Protective Equipment (PPE)
KOC-P-001	Rev 5	KOC Standard for Painting and Coating of External Metal Surfaces
KOC-P-004 Part 10	Rev 2	KOC Standard for Polyurethane Thermal Insulation and Outer Casing of Polyethylene for Underground Pre-Insulated Pipes
KOC-Q-014	Rev 2	KOC Standard for Project QA / QC General Requirements
KOC LIFE SAVING RULES		
KOC.EV.008	Waste Management Procedure	
KOC.GE.028	HSE Training, Awareness and Continued Learning Process	
KOC.GE.034	House Keeping Procedure	
KOC.HE.006	KOC Standard for Noise Exposure Control and Management Procedure	
KOC.HE.008	Chemical Hazard Management and Communication Procedure	
KOC.SA.003	Manual Handling of Loads	
KOC.SA.004	Permit to Work Procedure	
KOC.SA.010	Procedure for Personal Protective Equipment (PPE)	
KOC.SA.024	Job Safety Analysis (JSA) Procedure	

3.4 PROJECT SPECIFICATIONS

STANDARDS	DESCRIPTION
63040-00000-02-03-SDG-0101	STANDARD PIPE SUPPORT DRAWINGS
63040-00000-02-03-PMS-0101	PIPING MATERIAL SPECIFICATION
63040-EPF50-02-03-DBS-0101	PIPING DESIGN BASIS PART I
63040-JPF3U-02-03-DBS-0101	PIPING DESIGN BASIS PART II

4 ABBRIVATIONS

ABBREVIATIONS	DESCRIPTION
ASME	American Society of Mechanical Engineers
ASTM	American Society for Testing and Materials
BS	British Standards
EPF	Early Production Facility
ISO	International Organization for Standardization
JPF	Jurassic Production Facilities
KOC	Kuwait Oil Company (K.S.C)
NFPA	National Fire Protection Association
P&ID	Piping and Instrumentation Diagram
PFD	Process Flow Diagram
SPETCO	Safwan Petroleum Technologies Company
HVAC	Heating Ventilation and Air Conditioning

5 DEFINITION

NOMENCLATURE	DESCRIPTION
Company	Kuwait Oil Company (KOC)
Contractor	SPETCO International Petroleum Company W.L.L. (SPETCO)
Consultant	Petrocil Engineers & Consultants (PETROCIL)
Project	Depletion Compression System & SRU at EPF-50 & JPF-3, North Kuwait

6 RESPONSIBILITY

The party whoever performs (directly/indirectly) the insulation activity those are responsible for complying with this specification requirements

Insulation shall be suitable for desert location under high ambient temperatures and humidity. The atmosphere at the Facility is generally dusty and corrosive and may contain traces of hydrogen sulphide

Insulation shall in all respects to be suitable for continuous operation in the service conditions stated in the Engineering Group Specification entitled "Basic Design Data" (KOC-G-007).

Care should be taken when working with insulation materials and manufacturers data sheets should be reviewed before any work commences. The area in which work will be carried out should be safe for the Operator to work and all the local, state or federal regulations are adhered to. All the correct PP (personal Protection) should be made available to the operator before the work commences. Checks should be made.

To ensure that the operator is suitably qualified to carry out the necessary work. Insulation material shall not contain asbestos

Before taking up insulation job on piping or vessels it shall be ensured that hydrostatic test of the concerned Equipment / piping is completed.

7 INSULATION TYPES AND APPLICATIONS

Thermal insulation types are listed in Table for external surfaces of piping and equipment. Insulation type is based on the intended application (and type shall be confirmed as per Process requirement) and is specified on the piping isometric drawings, P&ID, and on the equipment drawings issued by the contractor

Type Code	Application Description / material & Thickness
HC	Heat Conservation (Mineral Rock wool), for Piping, Equipment operating temperature above 60°C and Process Requirement above ambient. Thickness as per Table 13-4
PP	Personnel Protection (Mineral Rock wool), Surfaces operating temperature above 70°C within 2100 mm (7 ft.) above grade or platforms and 900 mm (3 ft) horizontally from the periphery of platforms, walkways, or ladders. Thickness as per Table 13-5
ET	Heat Conservation (Electric Traced) Mineral rock wool, Ambient and Higher operating temperature. Thickness as per Table 13-6.
C	Cold insulation sealed (Polyurethane Foam). Surfaces operating below ambient (75°F or 24°C). Thickness as per Table 13-7. Vendor can propose alternative material for Cold Insulation for SPETCO review.

Insulation and finish requirements for piping and equipment shall be as specified herein. In general, Heat Conservation and Personal Protection insulation of thickness greater than 3'' (75 mm) shall be installed with double layers. For Cold insulation, number of insulation layer shall be as per Table 13-7

If any conflicts between the requirements defined herein and those indicated in the piping / equipment Drawings shall be brought to the attention for resolution prior to application of the Insulation system.

The term "equipment" includes vessels (towers, drums, re-boilers, and exchangers), machinery (pumps, Compressors, turbines) and tanks (vertical, cylindrical storage tanks).

8 EXTNT OF INSULATION FOR PIPING AND EQUIPMENT

TABLE 8.1

APPLICATION DESCRIPTION		INSULATION TYPE		
		ENERGY CONSERVATION HC (MINERAL WOOL)	PERSONNEL PROTECTION PP (MINERAL WOOL)	HEAT TRACE ET (MINERAL WOOL)
Process piping (Included Sour Service)	Pipes & Fittings	NOTE-1	As applicable (Note-1)	Refer ET piping
	Flanges & Valves	NO	NO	Refer ET piping
Hot oil service piping	Pipes & Fittings	YES	N/A	N/A
	Flanges & Valves	YES	N/A	N/A
ET (Electrical traced) piping	Pipes & Fittings	N/A	N/A	YES
	Flanges & Valves	N/A	N/A	YES
Cold Insulated service piping (Type C)	Pipes & Fittings	YES	N/A	N/A
	Flanges & Valves	NOTE-3	N/A	N/A
Man way cover on Vessels		YES (Note - 1,3)	N/A	YES (Note 1)
Relief Valves		NO	NO	NO
Heat Exchanger Shell and Fixed Rear Bonnet Surfaces		YES	As applicable	N/A
Heat Exchanger Channel, Channel Cover, Channel Bonnet and Channel/Body Flange Joints		YES	As Applicable	YES
Pump Casings		NO	NO	NO
Compressors		(Note-2)	(Note-2)	NO

NOTES TO TABLE 8.1

1. Insulation shall be done up to neck in tapered shape so as to permit removal of studs without damaging the adjacent insulation.
2. Insulation shall be furnished in accordance with the equipment supplier's recommendations.
3. For Cold insulation, all pipe fittings, flanged joints and valves shall require insulation completely. However, cold insulation of all flanged joints, valves, instruments shall be carried out at field so as to allow any field leak test of flanged joints.
4. Insulation for Personal protection on Pipe Racks piping shall be avoided

9 GENERAL REQUIREMENT

- All piping in hot service shall be insulated with rigid or semi-rigid preformed half sections or radiused and beveled edge lags.
- Valves and flanges on piping in hot oil service shall not be insulated except where required for specific process requirements. Where required, personnel protection shall be stand-off expanded metal boxes
- Insulation for personnel protection shall be required when the line temperature exceeds 70 °C and when the surface is located beside walkways or elsewhere which could be touched in the course of normal operating duties. This is further defined as:
    a. Horizontal piping where bottom of pipe is below 2.0 m above grade or at working level.
    b. Vertical piping, where portions of the pipe are below 2.0 m above grade or at working level.
    c. Piping adjacent to and within 1000 mm of a working platform.
    d. Protection shall be provided from 150 mm to 2.0 m above grade or at working level.
- All pipe insulation shall be provided with an Aluminum metal jacket with a factory-bonded moisture barrier unless otherwise specified.
- Securement for basic insulation shall be as follows:
    a. 1.0 mm Type 304 SS. Wire on maximum 225 mm centers for up to 200 mm outside diameter (OD) of insulation.
    b. 0.6 mm x 20 mm Type 304 SS bands on maximum 225 mm centers over 200 mm outside diameter (OD) of insulation.
- Securements for metal jacket 12 mm x No. 10 pan head stainless steel screws
- The insulating materials shall not react corrosively with the insulated surface, produce a deterioration of the other components that constitute the insulation system and are to be resistant to accidental spillage of oils or the plant process fluids.
- Non-metallic insulation materials, including adhesives and sealants shall have a flame spread rating of not greater than 25 when tested to the requirements of ASTM E84.

10 MATERIAL REQUIREMENT

10.1 MINERAL ROCK WOOL

Mineral Rock wool is the considered material for heat conservation (HC), Personal protection (PP) and Electric traced (ET)

Mineral Rock wool insulation for pipe sectional insulation, slab and mattress (where specified) shall satisfy the following requirements:

PROPERTY	REQUIREMENT
Density	120-150 kg/m3, water repellent
pH	7 – 8 (when wet)
Leachable total chloride content	14 ppm (14 mg/kg) max when measured in accordance with ASTM C871
Thermal Conductivity	Tested in accordance with ASTM C177
Shot content	20% max. (ASTM C1335)

Thermal insulation products shall be qualified for use on austenitic stainless steel in accordance with ASTM C795. The material manufacturer shall demonstrate that the material that will be furnished for this Project Has

passed the pre-production corrosion test in accordance with ASTM C692. The material manufacturer shall also furnish a chemical analysis in accordance with ASTM C871.

The Material shall be suitable to use at specified minimum/maximum operating temperature of piping/ Vessels and others.

Mineral wool molded segments/slabs shall be used for Piping and Shell surface of equipment.

Mineral wool mattress of same thermal performance as preformed sections can be used on irregular equipment and vessel Heads or other complex shapes as approved by contractor. Mineral wool wire mesh faced mattress shall have one side stitched with galvanized wire and 25 mm hexagonal pattern. On stainless steel piping and equipment, stainless steel wire mesh shall be applied using stainless steel

10.2 PERFORMED POLYURETHANE FOAM FOR COLD INSULATION

Preformed Polyurethane foam (Closed cell, CFC free) of minimum density 45 Kg/m3 is the considered material for Cold insulation

10.3 ALUMINIUM PROTECTIVE COVERING

All insulations shall be covered with a 0.9 mm thick stucco embossed aluminum sheath with polysurlyn moisture barrier facing. All removable box insulation such as valves, flanges, man ways etc. shall have a minimum thickness of 1.2 mm with a smooth finish.

Aluminum jacket on vertical vessels over 36'' diameter shall have a 1-1/4'' (32mm) corrugation.

All cut-outs are to be suitably sealed with caulking. Aluminum protective covering installation shall be as per table 13-2 & 13-3.

10.4 FASTENERS AND MISCELLANEOUS INSULATION ACCESSORIES

- All metallic accessory materials (bands, seals, screws, etc.) shall be austenitic stainless steel, Type 316, unless noted otherwise.
- All banding shall be furnished de-burred.
- Tie wire shall be 1.0 mm minimum diameter, stainless steel 316.
- Sheet metal screws for fastening sheet to structure or sub-girt shall be austenitic stainless steel with hex drive head and integral EPDM washer or Pan Head with EPDM washer.
- For cold insulation, Tape for fastening insulation shall be 25 mm wide pressure sensitive glass filament reinforced tape.

10.5 FABRICATION ADHESIVES, MASTICS AND METAL SELANTS

All adhesives, mastics for cold insulation and metal sealants shall be suitable to temperature conditions, atmospheric conditions and intended functions of the insulation system.

The following manufacturer's products or any other Vendor recommended equal materials (subject to CONTRACTOR approval) are acceptable:

- CHILDERS PRODUCT
- H.B. FULLER/FOSTER PRODUCTS
- VIMASCO CORP

10.6 REMOVABLE INSULATION COVERS

If insulation specified for Flanges, valves, man-ways and other item where insulation would interfere with normal operation, removable insulation covers should be provided

Insulation applicator can adopt his own good engineering design in providing the removable insulation covers, but it should be in two halves with locks/pins wherever applicable. The design shall be reviewed and approved by the CONTRACTOR.

11 INSTALLATION, HOT INSULATION (HC, PP, ET)

11.1 PIPING INSULATION

Sectional and segmental insulation shall be applied in one or two layers, as required by insulation type and operating temperature, to the thickness specified. Single layer systems and the inner layer of double layer systems shall have joints tightly butted with circumferential joints staggered. Double layer systems shall be installed so that the outer layer is staggered with respect to the longitudinal and circumferential joints the outer layer is staggered with respect to the longitudinal and circumferential joints of the inner layer. Each layer of double layer insulation shall be held in place separately.

The insulation shall be performed and of the correct size. Voids shall be filled with pieces of the same Material or with suitable insulating cement.

At all flanged joints, the pipe insulation shall be cut back or beveled at such an angle as to permit removal of the studs from either side of the flange without damage to the adjacent insulation as to permit removal of the studs from either side of the flange without damage to the adjacent insulation

As an alternate to die-formed elbow covers, covers for insulation on piping ells may be fabricated from jacketing material. . The jacketing shall be arranged in gored segments. For this purpose, each segment shall be fabricated with both sides parallel to the curved edge, one edge crimped for fitting under and one edge swaged for fitting over. The cladding shall be made up in no less than one segment for each end and one segment for each cut insulation segment.

11.2 EQUIPMENT INSULATION

Insulation shall be applied in one or two layers to the thicknesses specified. All joints shall be carefully fitted. Circumferential joints shall be staggered for horizontal equipment and longitudinal joints shall be staggered for vertical equipment.

In double layer applications, all joints in the outer layer shall be staggered with respect to inner layer joints.

The insulation installation shall be as specified in table 13-1.

Unless otherwise specified, vertical equipment support legs and lugs and saddle Supports for horizontal equipment shall not be insulated.

Insulation on skirt supported vertical vessels shall be extended past the bottom Tangent line, down the exterior surface of the skirt to the bottom insulation support ring. Vessels having skirt inside diameters exceeding 1200 mm shall have the corresponding inside skirt surface insulated. Corresponding inside skirt surface insulated.

Equipment nozzles connected to bare piping shall have the equipment insulation system terminated on the nozzle and finished with a metallic cover. The insulation shall be applied to the nozzle prior the application of insulation to the shell of the vessel. In case of double layer application, the installation of the insulation on the

nozzle shall be applied first for each consecutive layer in order to form a staggered joint at the nozzle /shell junction.

For insulation of vessel shells, rigid pipe sections or rigid curved radius segments shall be utilized up to the maximum commercially available size. Beveled block insulation for vessel shells shall be used only when shell diameters exceed the commercially available size of curved radius segments. Edge beveling of block shall be in accordance with ASTM C450 Adjunct ADJC0450. Bevels may be applied to either one or both block edges. Small voids around nozzles and other projections through the insulation on the shell and heads shall be packed with suitable material.

Heat exchangers shall be insulated in a manner similar to horizontal vessels. Heads on exchangers that are removable shall be insulated to allow access to the bolts with minimum damage to the insulation. Flanged ends shall be insulated with a flat cover that is removable

Code or other nameplates shall not be covered by insulation

11.3 MACHINERY INSULATION

No insulation is required for pumps and other rotating equipment. Compressor insulation shall be as per Compressor vendor recommendations and no further insulation is recommended as per this specification

Unless specified otherwise on individual equipment data sheets or in an equipment insulation summary, insulation shall not be applied to other machinery items

11.4 INSTRUMENT INSULATION

Instrument signal tubing, instrument analyzer tubing and equipment instrument bridles up to instrument connections shall be insulated if heat traced and for personnel protection if operating temperature is above 60°C. Instrument tubing on steam piping shall not be insulated.

Heat traced bridles shall be insulated in accordance with the insulation requirements specified for piping

11.5 INSULATION FINISH

All insulation terminations on piping and equipment shall be metal finished and weather tight. Jacketing shall be fitted carefully around vessel and piping attachments which pass through it. Metal sealant shall be applied to the extent necessary to prevent the entrance of water around penetrations through the jacketing. Jacketing shall be installed to shed water. Insulation finish shall be as per table 13.2

11.6 REQUIREMENT FOR INSULATION TYPE PP

- Personnel protection shall be provided if normal temperature of a surface exceeds 70ºC and if the surface is in an area that is accessible to personnel.
- Personnel protection by means of insulation is not preferred on piping and equipment operating at temperatures below 120 °C or used only intermittently as they are vulnerable to severe corrosion.
- Hot piping or equipment within 1.0 m of any walkway, ladder or stairway should be protected from the bottom of these access points up to a height 2.0 m above them
- However, if insulation is to be used for personnel protection, the thickness shall not be less than 25 mm. The insulation thicknesses in sub-clause 14.1 of this Standard are suitable for personal protection.

11.7 ADDITIONAL REQUIREMENTS FOR INSULATION TYPE ET

Jacketing for insulation type ET (electrical traced) piping shall be installed with bands only. Screws and rivets may damage the electrical tracing and are not acceptable fasteners for any jacketing installed to finish insulation on electrically traced piping.

12 INSULATION, COLD INSULATION (C, COLD SERVICE AND FREEZE PROTECTION)

12.1 PIPING INSULATION

Sectional and segmental insulation shall be applied in one or two layers, as required by insulation type and operating temperature, to the thickness specified. Reinforced tape may be used in place of metal bands. Single-layer insulation shall be applied with joints staggered, all edges completely coated with joint sealer and tightly butted. Multi-layer insulation shall be applied with side and end joints staggered over the joint of the preceding layer. The joints of all layers shall be sealed and tightly butted.

All pipe fittings and flanges shall be completely insulated. All valves shall be insulated up to but not including the packing gland or nut except for control valves with extended bonnets, these shall be insulated to the bonnet flange.

All sharp corners and edges of insulation should be rounded. Large voids other than contraction joints or inside boxed areas shall not be filled with joint sealer but eliminated by refitting or replacing insulation.

A vapor barrier shall be installed over the insulation. The mastic type vapor barrier shall have a first coat of mastic with a fabric membrane embedded and a final coat of mastic.

Aluminum jacketing shall be installed over the vapor barrier as specified in section 10.3 & Table 13-2 &13-3. Joint sealer shall be used to seal all protrusions through the jacket.

12.2 EQUIPMENT INSULATION

The insulation shall be performed and of the correct size. All voids must be filled with pieces of the insulating material and sealed with waterproofing mastic. All joints shall be tightly butted together, sealed with joint sealer. The insulation shall be held in place with ¾" filament tape or with ½'' stainless steel bands (max 300 mm centers).

Contraction joints shall be installed at each support ring for horizontal vessels. When more than one layer is required, all joints shall be staggered.

A vapor barrier shall be installed over the insulation. The mastic type vapor barrier shall have a first coat of mastic with a fabric membrane embedded and a final coat of mastic.

Aluminum jacketing shall be installed over the vapor barrier as specified in section 10.3 & table 13-2 & 13-3. Joint sealer shall be used to seal all protrusions through the jacket.

Openings in the jacket at nozzles, brackets and related items shall be cut as close as possible to provide a snug fit and shall be sealed with joint sealer to prevent moisture from penetrating the jacket.

Equipment saddles on horizontal vessels are to be insulated with 1'' thick Arama flex (or equal) for a distance below the insulation that is equal to four (4) times the thickness of the vessel insulation.

Heat exchangers shall be insulated in a manner similar to horizontal vessels. Heads on exchangers that are removable shall be insulated such to allow access to the bolts with minimum damage to the insulation. Flanged ends shall be insulated with a flat cover that is removabl

13 INSULATION ATTACHMENT METHODS, INSULATION FINISH REQUIREMENT AND INSULATION THICKNESS TABLE

13.1 INSULATION ATTACHMENT METHODS AND MATERIALS (ROCK WOOL)

INSULATION		EQUIPMENT		METHOD OF ATTACHMENT	
FORM	MATERIAL	TYPE	SIZE (Note 1)	TYPE (Note 2 & 5)	SPACING
Segments, Block and Lags	Mineral Wool	Pipe and equipment shells	Over 750 mm	Band "B"	300 mm on centers for single/ outer layers and 450 mm on centers for all inner layers
Slab	Mineral Wool	Equipment shells	Over 1800 mm	Band "B"	225 mm on centers for single/ outer layers and 450 mm on centers for all inner layers
Mattress	Mineral Wool	Equipment heads, Irregular equipment surfaces	All	Band "B"	300mm maximum space at knuckle radius- minimum 1 per block (Note-3)

Notes:

1. Size is the nominal pipe size or the vessel outside diameter
2. Materials are as follows:

   Band “A: 13mm by 0.50mm, Stainless steel 316.
   Band “B”: 19 mm by 0.50mm, Stainless steel 316.
   Wire: 1.0mm diameter, Stainless steel 316

3. Attachment of high temperature insulation over irregular surface may be with wire if the use of band is impractical.
4. Band over wire space specified as “300 mm maximum all layer” or “450” mm max all layer” applies to 900mm long insulation segment. Shorter length, such as 600mm long V grooved mineral wool slab requires two (2) bands or wires per section on all layers.
5. Unless noted otherwise, equipment installed with fibrous type insulation does not require insulation spring for band securing insulation to the shell of equipment. For equipment installed with rigid block insulation, 100mm long, flat spring are required for each band.

13.2 INSULATION FINISH REQUIREMENT

EQUIPMENT OR PIPING		OUTSIDE DIAMETER (NOTE-7)	INSULATION FINISH	END LAP (NOTE -2)
Vessel	Shell	915mm (36") or less	Flat Metallic Sheet	75 mm – longitudinal and circumferential
		Over 915 mm (36'')	32 mm corrugated metallic sheet	2 corrugations - longitudinal 75mm- circumferential
	Exposed Head	All	Gored flat metallic sheet	Gores require a 75-mm lap at shell junction
	Concealed Head			
Horizontal vessel And Heat Exchanger	Shells and Channels	All	Flat Metallic Sheet	75 mm - longitudinal and circumferential
	Heads	All	Gored flat metallic sheet	Gores require a 75 mm lap at shell junction
Piping	Straight Pipe, Tees and Piping Branch Connections	NPS 24 or less	Flat metallic sheet	50mm- longitudinal and circumferential
		Over NPS 24	Flat metallic sheet (Note 4)	75mm- longitudinal and circumferential
	Bent Pipe	All	Gored cover fabricated from flat metallic sheet - same thickness as pipe	End laps same as above for straight pipe - lap individual gores 50 mm along inside radius
	Elbows	All	Gored cover fabricated from flat metallic sheet -same thickness as pipe	End laps as above for straight pipe, etc.
	Valves, Flanges (only when insulation is required)	Over NPS 24	Removable and reusable insulation covers	50 mm - all directions
				75 mm - all directions

13.3 INSULATION FINISH REQUIREMENT

ITEM	LOCATION OF FINISH (Note 2)	OUTSIDE DIAMETER (Note 7)	METHOD OF ATTACHMENT	
			SECUREMENT TYPE (Note 1)	SPACING
Vertical Vessels	Shells	Less than 1200 mm	Band "B" (Note 8)	300 mm maximum centers (Notes 3, 4, 5)
		1200 mm and larger		300 mm maximum centers supported radially with belt loops on 4.5 m centers minimum 2 per band (Notes 3, 4 5)
	Exposed Heads	All	Screws (Notes 5 & 6)	150 mm centers along gore laps
	Concealed Head	All		
Piping	Straight Pipe, Tees and branch connections	NPS 24 and less	Band "A"	For insulation dia Less than or equal to 150 mm (6") : 225 mm maximum centers; For insulation dia greater than 150 mm (6") : 300 mm maximum centers; (Note 3)
		Over NPS 24	Band "B"	
Piping Fittings, Valves and Flanges	Elbows, Bent Pipe	All	Band "A", Screws	Band fasten die-formed and gored elbow covers at each circumferential end lap over (or under) the adjacent weather jacket. Fasten longitudinal heel and throat laps on die-formed covers with screws on 100 to 125 mm centers - minimum 1 screw for the throat lap and 3 screws for the heel lap. Fasten both longitudinal and circumferential laps in the throat area of each gored segment using a single screw. Fasten all gored segment circumferential laps with 1 screw per lap along the outside radius or heel of the gored cover. (Note 9)

	Valves, Flanges (Only when Insulation is required)		Band "A", Screws	300 mm maximum centers, minimum 2 per cylindrical section - screws on 100 mm maximum centers along Seams.

NOTES TO TABLE:

1. Band material shall be as follows:
   Band "A" - 13 mm x 0.5 mm, Stainless steel 316
   Band "B" - 19 mm x 0.5 mm, Stainless steel 316
   Belt loops shall be fabricated from the same material as the bands and shall be riveted to high point of corrugations on 450 mm maximum centers

2. Laps shall be oriented to shed water

3. All circumferential laps shall be banded.

4. Vertical sheathing support shall be provided on all vertical vessels and vertical piping having insulation outside diameters of 450 mm or more with the application of 13 mm by 0.5 mm austenitic stainless steel "S-clips" installed on 450 mm maximum centers (minimum 2 clips per sheet regardless of diameter).

5. Longitudinal laps in jacketing on vertical vessels shall be screw fastened on 150 mm centers. Circumferential laps on all vessels shall not be screw fastened except at the head gore/shell finish lap which requires circumferentially placed screws on staggered 150 mm nominal centers and at the bottom of the shell jacketing which requires circumferentially placed screws on 150 mm nominal centers.

6. Convex equipment heads that have been insulated with a flat disc shall have the lapping surfaces of the blind cover coated with silicone sealant prior to installation of the cover. Covers on horizontal equipment shall have the lapped seam oriented to shed water.

7. Outside diameter refers to nominal pipe or equipment diameter.

8. Screws are not allowed for cold Insulation. Band shall be used with a minimum of one band per gored segment. However, if band not at all possible to use, screws may be used (Subject to approval).

13.4 INSULATION THICKNESSES (MM) FOR PIPING AND EQUIPMENT

HEAT CONSERVATION - TYPE HC (Mineral Rock wool)

Operating Temp (°C)	60-150	151-230	231-300	301-400	401-600
NB Pipe Size (inches)					
½	25	25	40	50	65
¾	25	25	40	50	65
1	25	25	40	50	75
1½	25	25	40	50	75
2	25	25	40	65	90
3	25	40	50	65	90
4	25	40	50	75	100
6	40	40	65	75	100
8	40	40	65	75	100
10	40	40	65	90	115
12	40	50	75	90	115
14	40	50	75	90	115
16	40	50	75	90	115
18	40	50	75	90	115
20	40	50	75	90	125
24	40	50	75	90	125
30	40	50	75	90	125
36	40	50	75	90	125
Equipment Items	40	50	75	90	125

13.5 INSULATION THICKNESSES (MM) FOR PIPING AND EQUIPMENT

PERSONNEL PROTECTION - TYPE PP (Mineral Rock wool)

Operating Temp (°C)	60-150	151-230	231-300	301-400	401-600
NB Pipe Size (inches)					
½	25	25	40	50	65
¾	25	25	40	50	65
1	25	25	40	50	75
1½	25	25	40	50	75
2	25	25	40	65	90
3	25	40	50	65	90
4	25	40	50	75	100
6	40	40	65	75	100
8	40	40	65	75	100
10	40	40	65	90	115
12	40	50	75	90	115
14	40	50	75	90	115
16	40	50	75	90	115
18	40	50	75	90	115
20	40	50	75	90	125
24	40	50	75	90	125
30	40	50	75	90	125
36	40	50	75	90	125
Equipment Items	40	50	75	90	125

13.6 INSULATION THICKNESSES (MM) ELECTRICAL HEAT TRACING (ET)-MINERAL WOOL

NOMINAL PIPE SIZE	NORMAL/MAXIMUM OPERATING TEMPERATURE, ºC			
	38-100	101- 150	151- 200	201- 250
0.50	30	30	30	40
0.75	30	30	40	40
1	30	30	40	40
1.5	30	30	40	40
2	30	30	40	40
2.5	30	30	40	40
3	30	30	40	50
4	30	30	40	50
5	30	30	40	50
6	30	30	40	50
8	30	30	40	50
10	30	30	40	50
12	30	30	40	50
14	30	30	40	50
16	30	30	40	65
18	30	30	40	65
20	30	30	40	65
24	30	30	40	65
30	30	30	40	65
36	30	30	50	65
42	30	30	50	65
48	30	30	50	65
54	30	30	50	65
60	30	30	50	80
72	30	40	50	80
84	30	40	50	80
96	30	40	50	80
108	30	40	50	80
120	30	40	50	80
*144.00	30	40	50	80

13.7 INSULATION THICKNESSES (MM) FOR PIPING AND EQUIPMENT COLD INSULATION-TYPE C (POLY URETHANE FOAM)

NOMINAL	NORMAL/MAXIMUM OPERATING TEMPERATURE, ºC												
	20-10	9 - 0	-1-(-10)	-11 –(-20)	-21 –(-30)	-31 – (-30)	-41 -50	-51 –(-60)	-61 –(-70)	-71-(-80)	-81 –(-90)	-91-(-100)	-101- 110
0.50	25	25	30	35	40	45	50	55	60	60	65	70	75
0.75	25	25	30	35	40	45	50	55	60	65	70	75	75
1	25	25	30	40	45	50	55	60	65	70	75	75	80
1.5	25	35	35	40	45	55	60	65	70	75	80	8	90
2	25	35	35	45	50	55	60	65	75	80	85	90	90
2.5	25	35	35	45	50	60	65	70	75	80	85	90	95
3	25	35	40	45	55	60	65	75	80	85	90	95	100
4	25	35	40	50	55	60	70	75	85	90	95	100	105
5	25	35	40	50	55	65	70	80	85	95	100	105	110
6	25	35	40	50	60	65	75	80	90	95	100	110	115
8	25	35	45	50	60	70	80	85	95	100	105	115	120
10	25	35	45	55	60	70	80	90	95	105	110	120	125
12	25	35	45	55	65	75	80	90	100	105	115	120	130
14	25	35	45	55	65	75	85	90	100	110	115	125	130
16	25	35	45	55	65	75	85	95	100	110	120	125	130
18	25	35	45	55	65	75	85	95	105	110	120	125	135
20	25	35	45	55	65	75	85	95	105	115	120	130	135
24	25	35	45	55	65	80	90	95	105	115	125	130	140
30	25	35	45	60	70	80	90	100	110	120	125	135	145
36	25	35	45	60	70	80	90	100	110	120	130	140	145
42	25	35	50	60	70	80	90	100	110	120	130	140	150
48	25	35	50	60	70	80	90	105	115	125	135	140	150
54	25	35	50	60	70	80	95	105	115	125	135	145	150
60	25	35	50	60	70	80	95	105	115	125	135	145	155
72	25	35	50	60	70	85	95	105	115	125	135	145	155
84	25	35	50	60	70	85	95	105	115	125	135	145	155
96	25	35	50	60	70	85	95	105	120	130	140	150	155
108	25	35	50	60	70	85	95	105	120	130	140	150	160
120	25	35	50	60	70	85	95	105	120	130	140	150	160
*144.00	25	35	50	60	70	85	95	110	120	130	140	150	160

SINGLE LAYER DOUBLE LAYER TRIPLE LAYER

14 FIGURES

If any other installation design from shown in this section proposed by Insulation contractor shall be reviewed and approved by the CONTRACTOR.

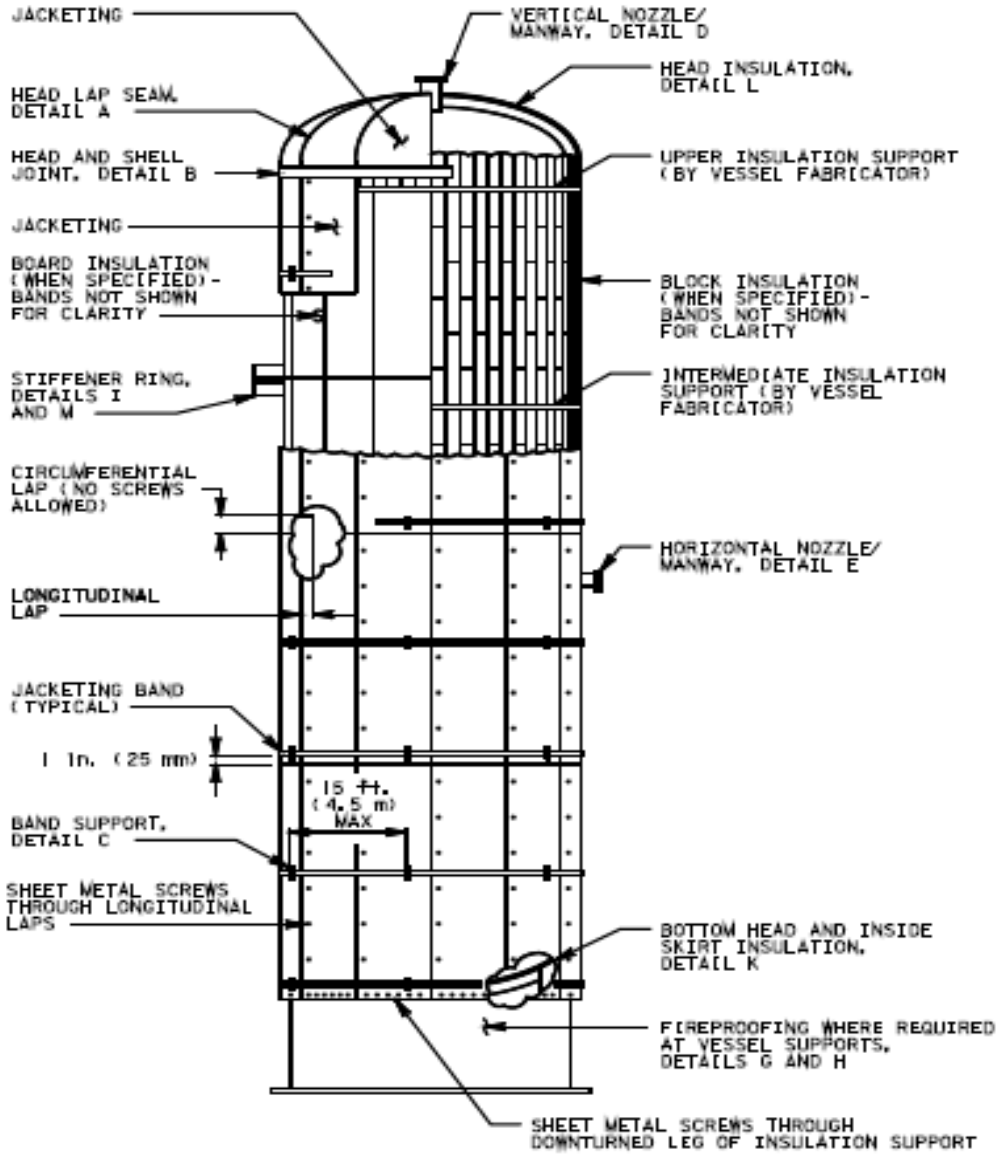

FIGURE 1 - TYPICAL BLOCK OR SLAB INSULATION ON VERTICAL VESSELS

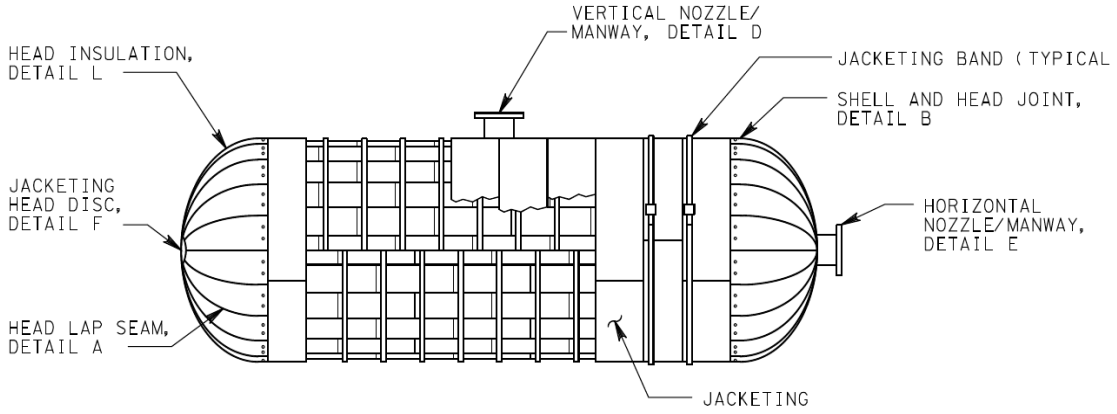

FIGURE 2 - BLOCK INSULATION ON HORIZONTAL VESSELS

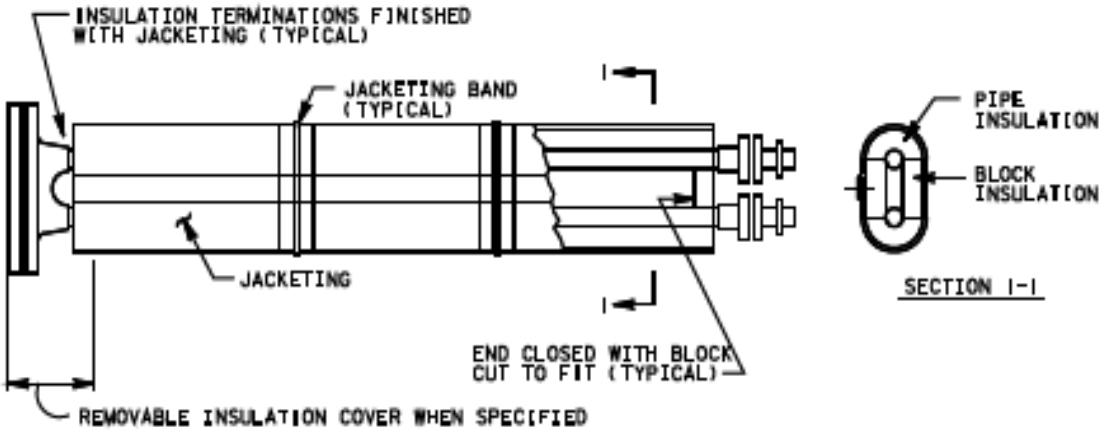

FIGURE 3 - PIPE COVERING AND BLOCK INSULATION ON DOUBLE PIPE HEAT

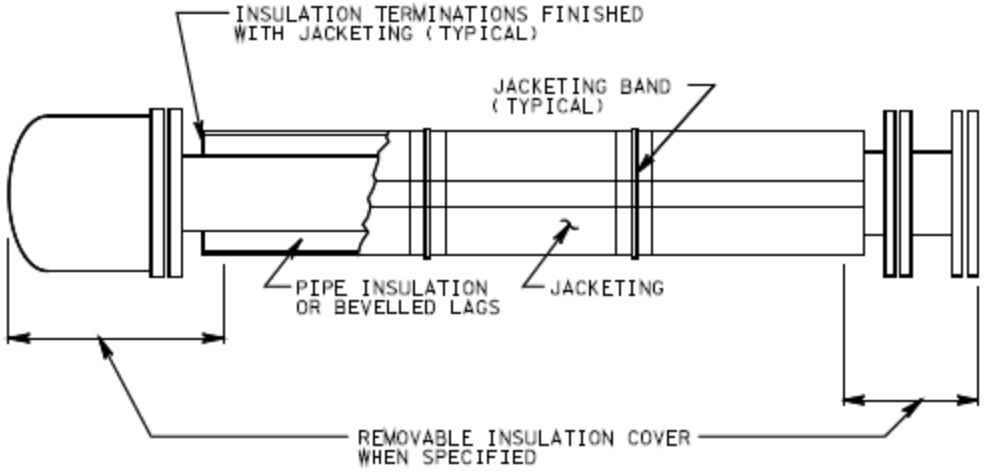

FIGURE 4 - PIPE COVERING OR BEVELED LAGS ON SHELL AND TUBE HEAT EXCHANGERS

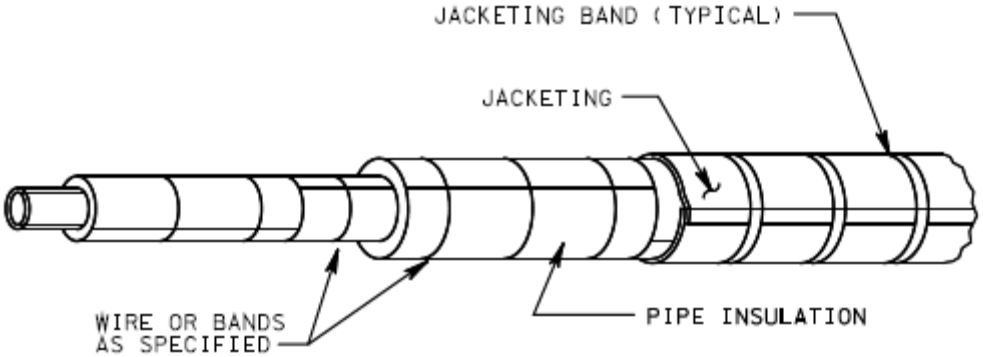

FIGURE 5 - SECTIONAL OR SEGMENTAL PIPE INSULATION

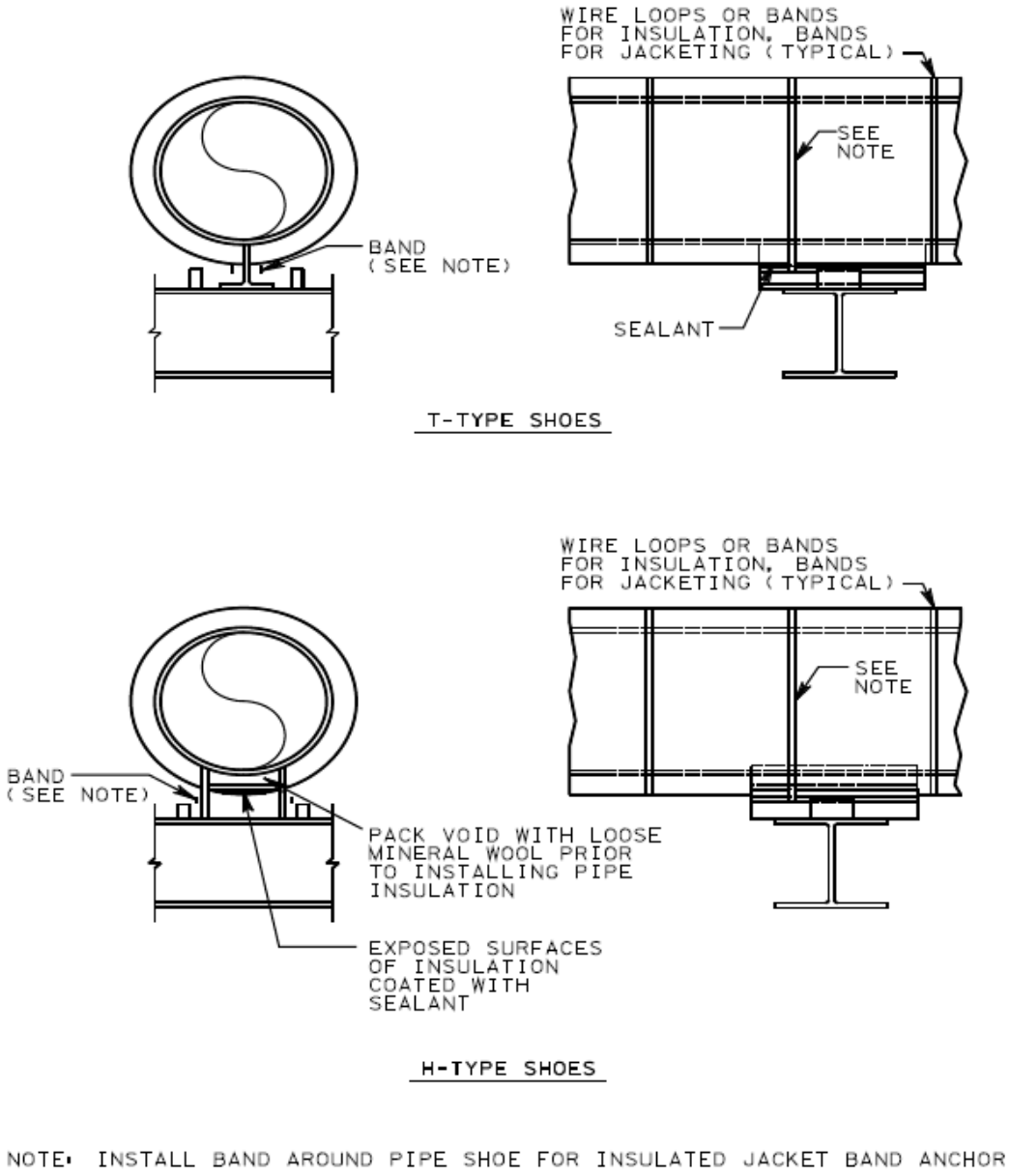

NOTE: INSTALL BAND AROUND PIPE SHOE FOR INSULATED JACKET BAND ANCHOR

FIGURE 6 - INSULATED LINES WITH PIPE SHOES

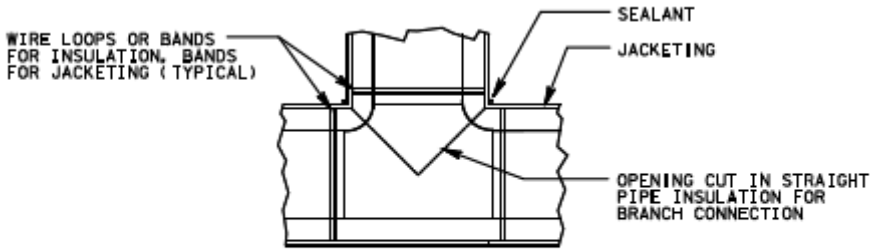

FIGURE 7 - BUTT WELDING TEE

FIGURE 7 - BUTT WELDING TEE

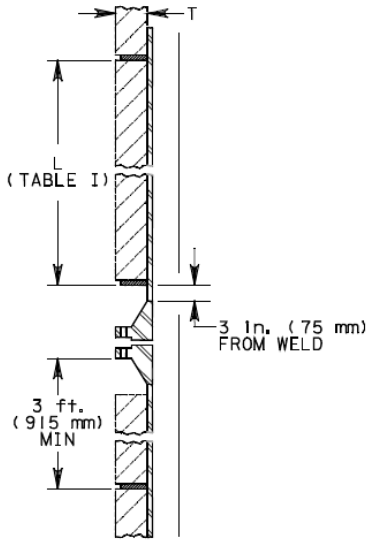

FIGURE 8 -TYPICAL SUPPORT LOCATIONS AT FLANGES

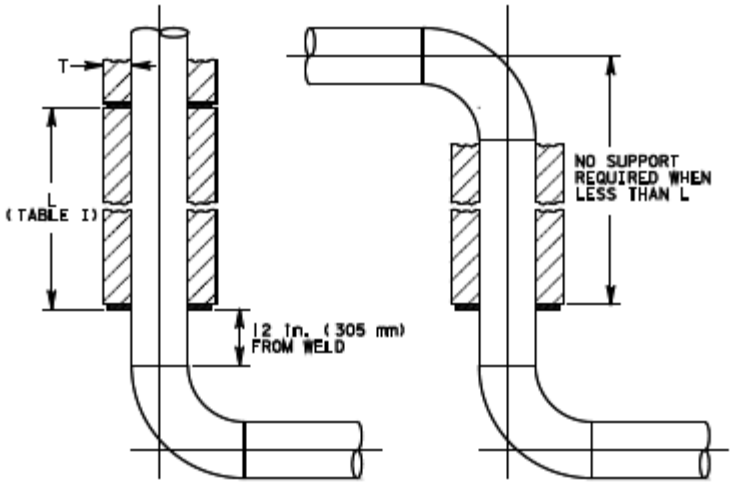

FIGURE 9- TYPICAL SUPPORT LOCATIONS AT ELBOWS

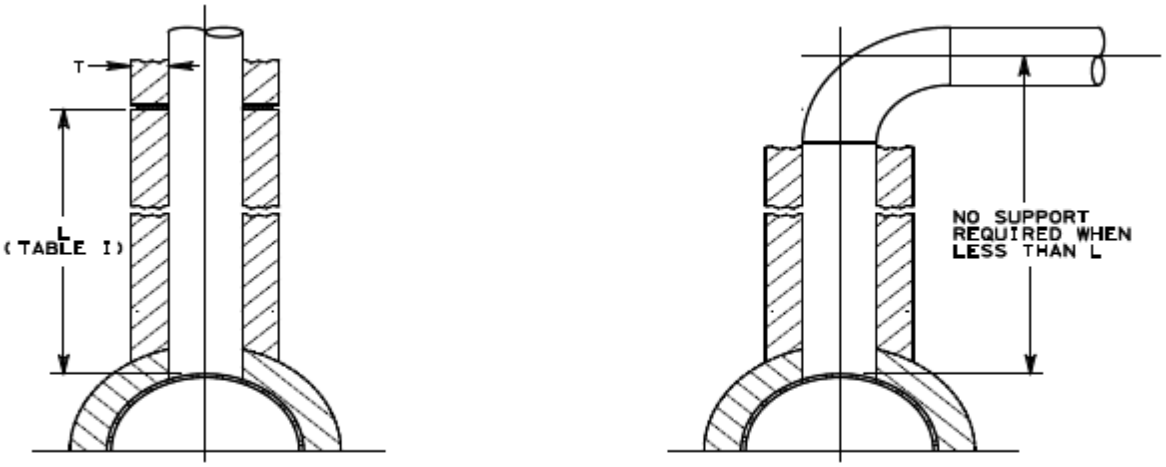

FIGURE 10 - TYPICAL SUPPORT LOCATIONS AT BRANCH CONNECTIONS OR TEE OUTLETS

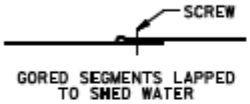

DETAIL A
HEAD LAP SEAM

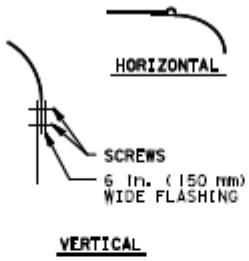

DETAIL B
HEAD AND SHELL JOINT

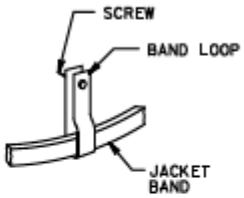

DETAIL C
BAND SUPPORT

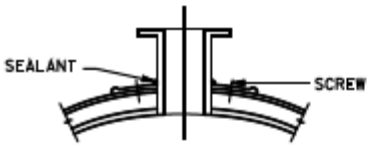

DETAIL D
VERTICAL NOZZLE/ MANWAY

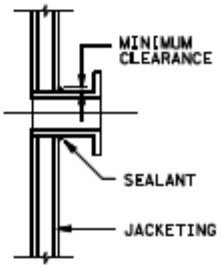

DETAIL E
HORIZONTAL NOZZLE/ MANWAY

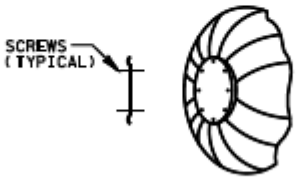

DETAIL F
JACKETING HEAD DISC

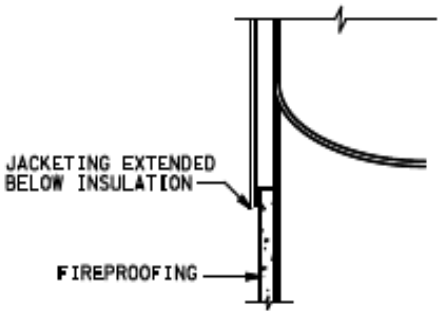

DETAIL G

FIREPROOFED SKIRT - INSULATION SAME THICKNESS AS OR THICKER THAN FIREPROOFING

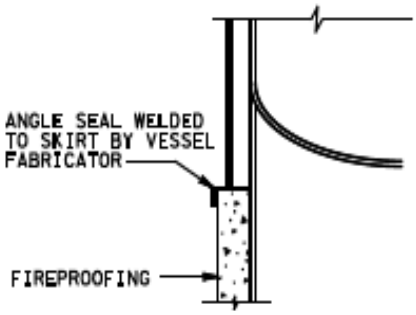

DETAIL H

FIREPROOFED SKIRT- INSULATION THINNER THAN FIREPROOFING

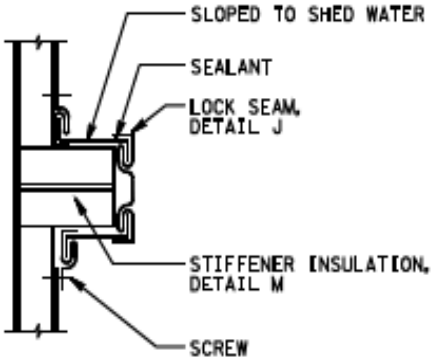

DETAIL I

JACKETING AT STIFFENER

DETAIL J

JACKETING LOCK SEAM

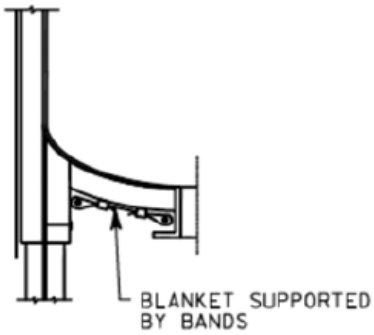

DETAIL K

BLANKET INSULATION SECURED WITH BANDS ON BOTTOM HEAD OF SKIRT SUPPORTED VERTICAL VESSEL

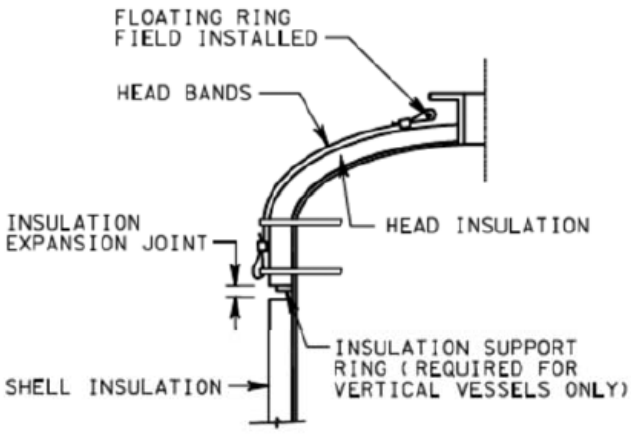

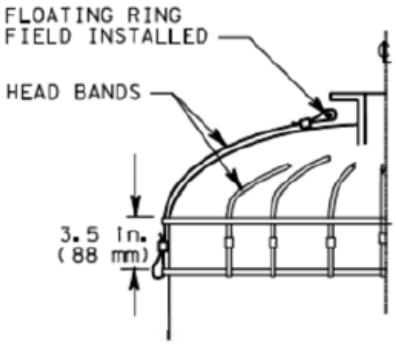

DETAIL L

Head Insulation Detail

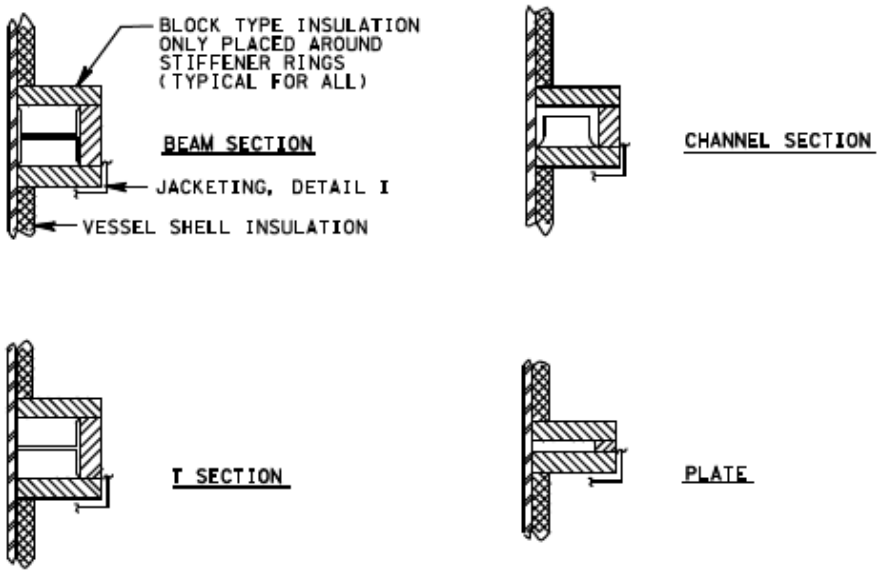

DETAIL M
INSULATION AT STIFFENER

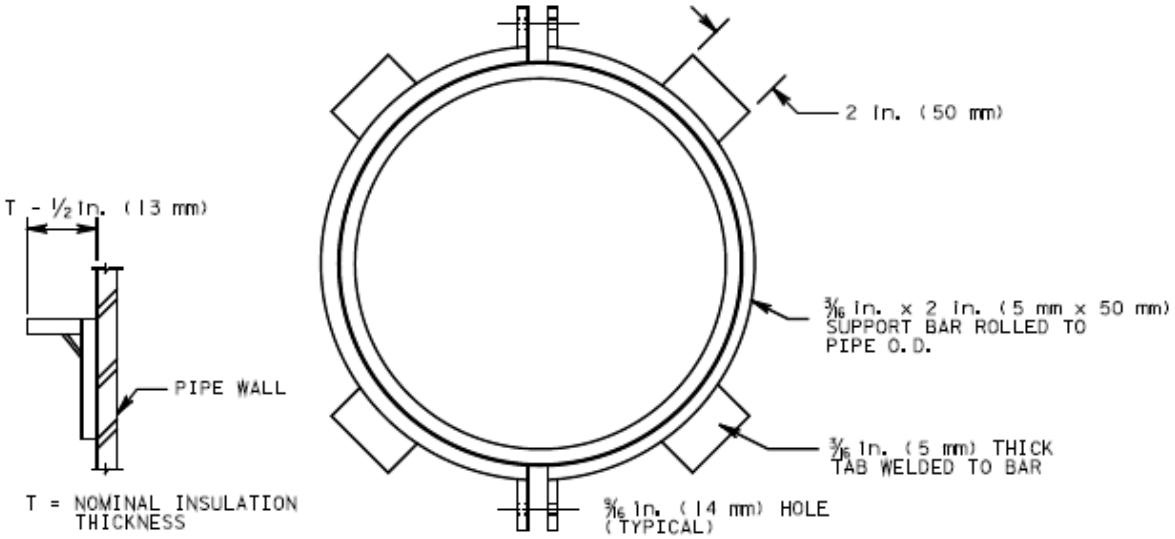

DETAIL N
BOLT-ON INSULATION SUPPORTS

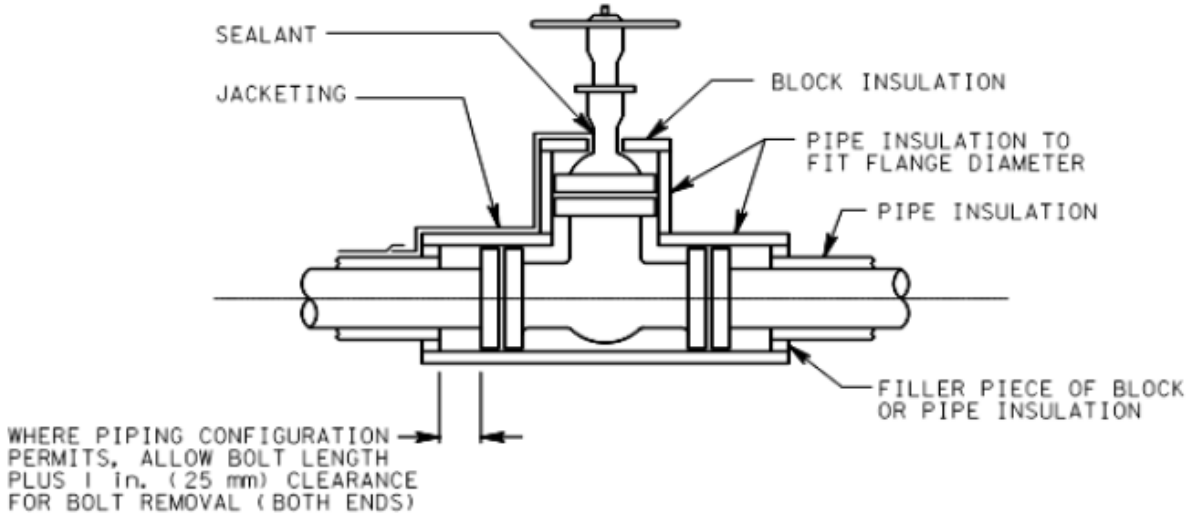

TYPICAL INSULATION COVER
VALVE COVERS FABRICATED IN TWO HALVES AND SECURED TO THE VALVE WITH BANDS

FIGURE 11 - TYPICAL INSULATION COVER DESIGN